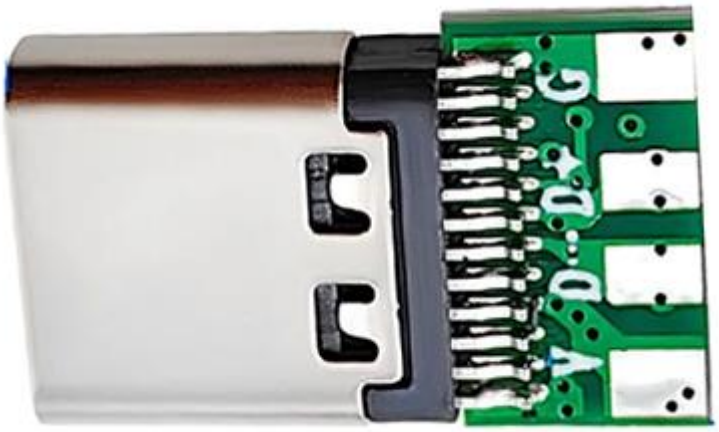

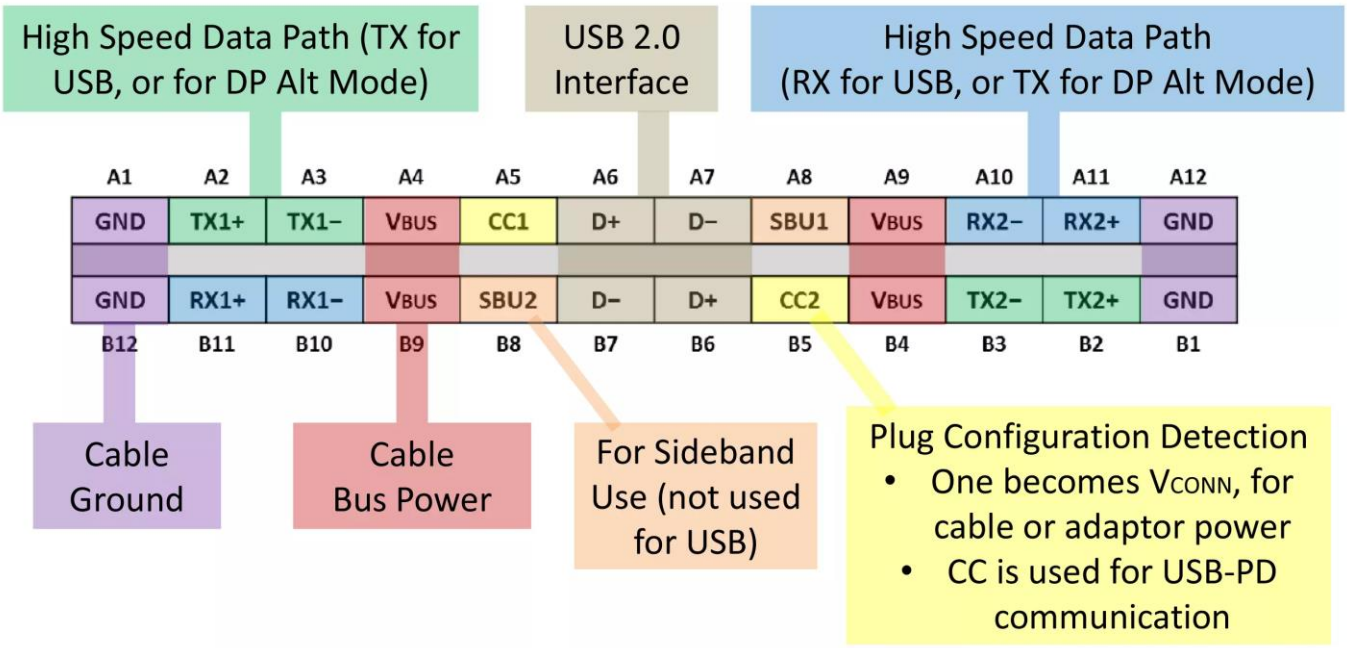
High Speed Data Path (TX for USB, or for DP Alt Mode)
USB 2.0 Interface
High Speed Data Path (RX for USB, or TX for DP Alt Mode)
A1 A2 A3 A4 A5 A6 A7 A8 A9 A10 A11 A12
GND TX1+ TX1− VBUS CC1 D+ D− SBU1 VBUS RX2− RX2+ GND
GND RX1+ RX1− VBUS SBU2 D− D+ CC2 VBUS TX2− TX2+ GND
B12 B11 B10 B9 B8 B7 B6 B5 B4 B3 B2 B1
Cable Ground
Cable Bus Power
For Sideband Use (not used for USB)
Plug Configuration Detection
• One becomes VCONN, for cable or adaptor power
• CC is used for USB-PD communication