Rating	30A
Insulation Resistance	DC 500V 100M ohm Min
Dielectric Strength	AC 1500V 1 minute
Operation Temperature	-20°C~+80°C
Color	Green \ Red \ Black

Material:
Socket: nickel plated Brass
Frame: PVC 80%N1
Fits O.D less ø 4.5mm wire by soldering.
Fits ø 4mm standard banana plug.

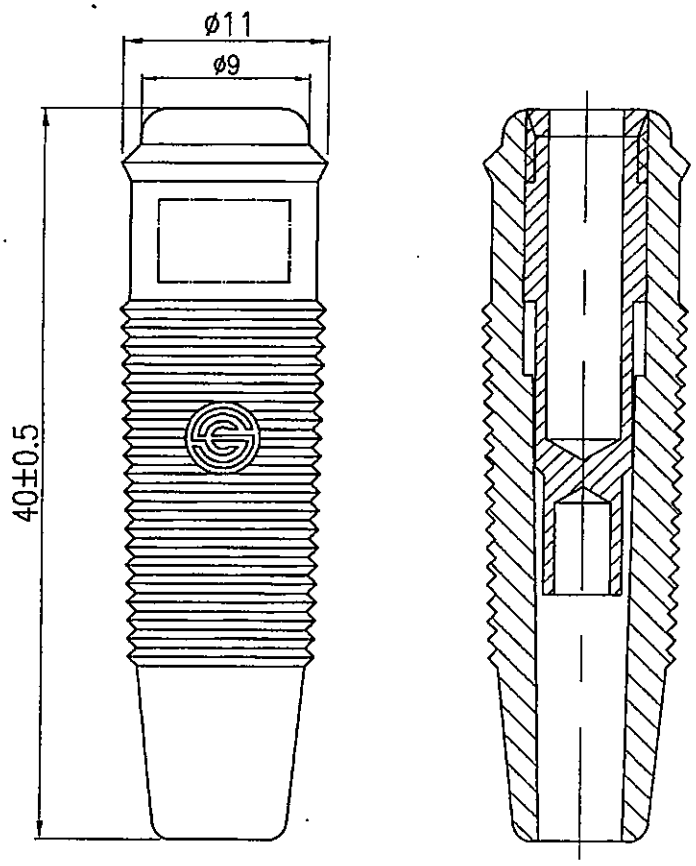

Tolerances ±0.3 Unless Otherwise Specified

							△
							△
Date	Name	Description					No.
Drawn	Checked	Approved	SCI BOM No.		Model Name	BANANA SOCKET	
柳新強			Customer No.		Model No.	R8-107	Rev.
04/05/'16			Unit	mm	Shin Chin Industrial Co., Ltd.		0