© THIS DRAWING IS THE EXCLUSIVE PROPERTY OF MARQUARDT. WITHOUT THEIR CONSENT IT MAY NOT BE REPRODUCED OR GIVEN TO THIRD PARTIES.

CONFIDENTIAL

VERTRAULICH

© Alle Rechte bei Marquardt, auch fuer den Fall von Schutzrechtsanmeldungen. Jede Verfuegungsbefugnis, wie Kopier- und Weitergaberecht, bei uns.

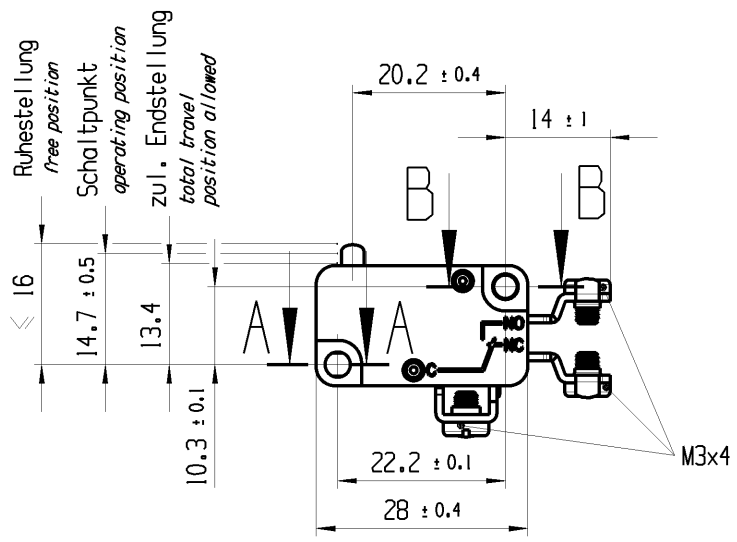


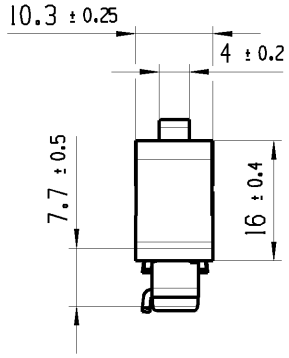


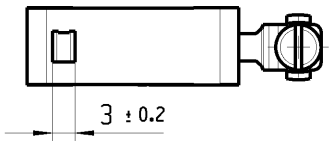


A-A
2:1

B-B
2:1

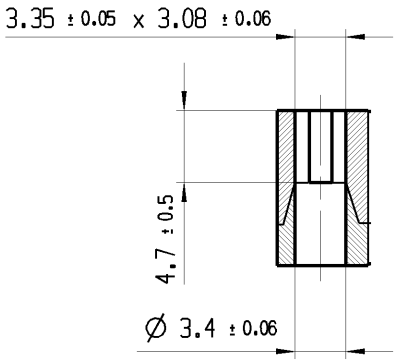


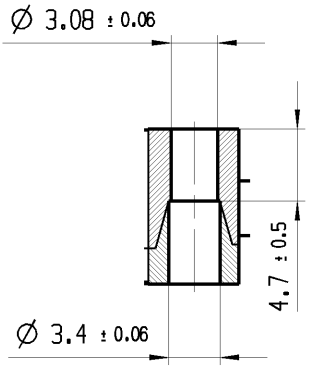


Aufschrift
*marking*

1005
T100
10(4) /400 ~ 10E3
6(2.5)/250 ~ 50E3 05

10A 125V AC 1/4HP
10A 250V AC 1/4HP
R44

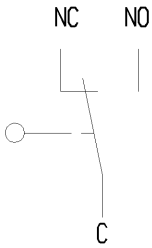


Wechsler 1-polig
*single pole changeover*

Schalt-Betaetigungskraft 1.5 bis 2.5 N
*actuating force* *0.2 up to 0.6 N*

Differenzweg ≤ 0.3 mm
*movement differential*

Herstellort / -jahr / -woche
*date code of manufacture: place / year / week*

| | | | | | | | | | | | | | | | |
|---|---|---|---|---|---|---|---|---|---|---|---|---|---|---|---|
| fuer Form und Lage FOR SHAPE AND LOC. | | | Allgemeintoleranzen UNTOLERANCED DIMENSIONS | | | | | Pause COPY | Blatt SHEET 01 | | TYP | Zeichn./DRAWING NO. | Index |
| fuer Winkel FOR ANGLE ± 2° | | | PROJEKTION | Abmasse und Nennmassbereiche Angaben in mm ALL DIMENSIONS ARE IN MILLIMETRES | | Laenge LENGTH | Radien RADII | | Original Din A4 | Massstab SCALE 1:1 | K | 10050101 | d |
| | | | | | 0-6 | ± 0.1 | ± 0.2 | | | | | | |
| | | | | | >6-15 | ± 0.15 | ± 0.3 | | | | | | |
| | | | | | >15-30 | ± 0.2 | ± 0.5 | | | | | | |
| | | | | | >30-70 | ± 0.3 | ± 10% | | | | | | |
| | | | | | >70-120 | ± 0.4 | | | | | | | |
| | | | | | >120 | ± 0.8 | | | 0 10 20 30mm | | | | |
| | | | | | | | | CAD: NX V6.0 | | | SCHNAPPSCHALTER snap action switch | | |
| d | 83050 | 18.07.13 | BRC | | | | | gez./DRAWN BY 19.06.13 BCY gepr./CHECKED BY | | | | | |
| c | 28404 | 19.01.00 | PFU | | | | | Ersatz fuer/REPLACEMENT OF Zg.gl.Nr.v.19.01.2000 | | | MARQUARDT | | |
| b | 20923 | 20.06.91 | WA | | | | | | | | | | |
| Ausg. ISSUE | Aenderung REVISION | gez. DRAWN BY | | Ausg. ISSUE | Aenderung REVISION | gez. DRAWN BY | | | | | | | |